REV.	DESCRIPTION	DRAWN	CHECKED	APPROVED
A	NEW RELEASE	HP 22/06/05		

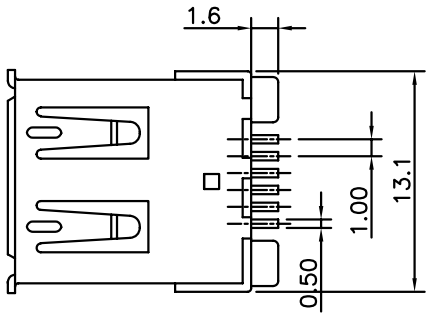

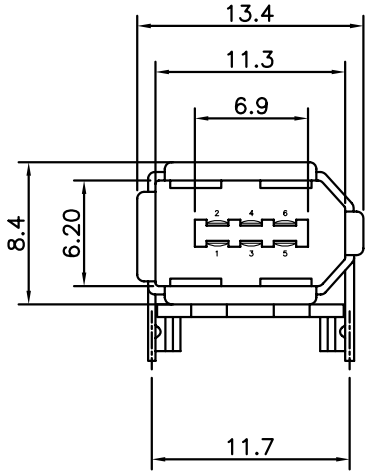

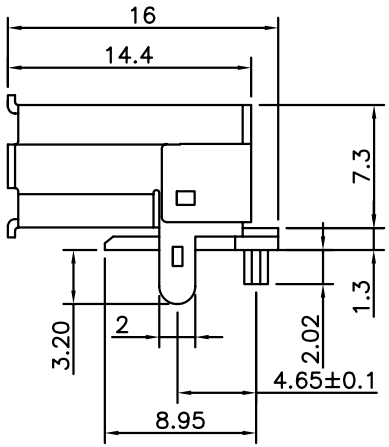

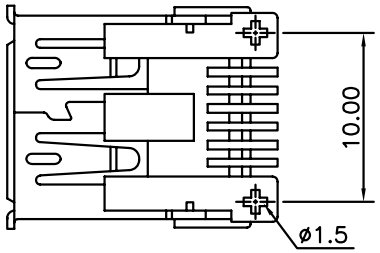

NOTES:

1. SPECIFICATIONS
   - . Contact Resistance: 50mΩ max
   - . Insulator Resistance: 100MΩ min.
   - . Current Rating: 1.5 A.
   - . Rated Voltage: 30V DC
   - . Dielectric withstanding voltage: AC 100V For 1 minute
   - . Contact: Copper Alloy
   - . Housing: Thermoplastic(UL 94V–0)

2. PRODUCT NUMBER CODE:

DS1102 – X X X

- Contact plating
  C: Selective 3u" gold
- Shell plating
  N: Nickel
  6: Tin
- Color of housing
  B: Black

GENERAL TOLERANCE	ANGLE TOLERANCE
X. ±0.60	X. ±5°
.X ±0.38	.X ±3°
.XX ±0.25	.XX ±2°

DRAWING TYPE	CUSTOMER		
SCALE	1:1	SHEET	1 OF 1
DRAWING NO.	C–DS1102–XXX		

PROJECTION		TITLE	IEEE 1394 Female 6PIN SMD TYPE
UNITS	mm		
SHEET SIZE	A4	SERIES	DS1102

IEEE 6FSMT 1102