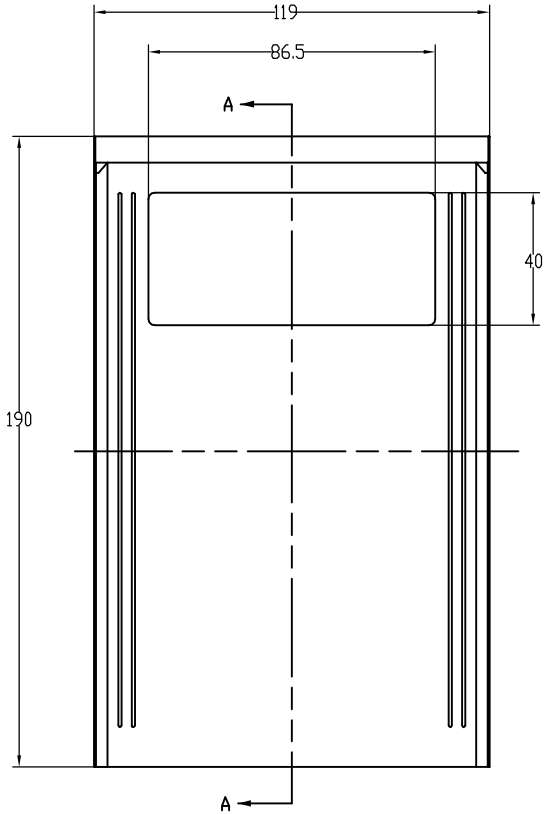

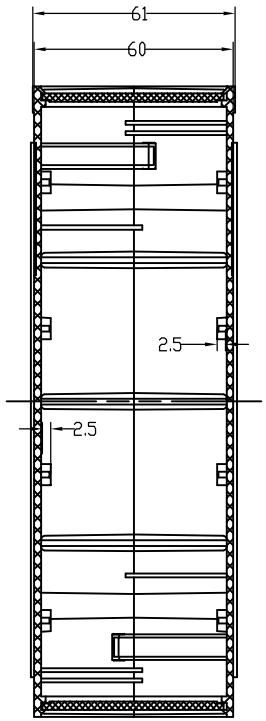

A-A

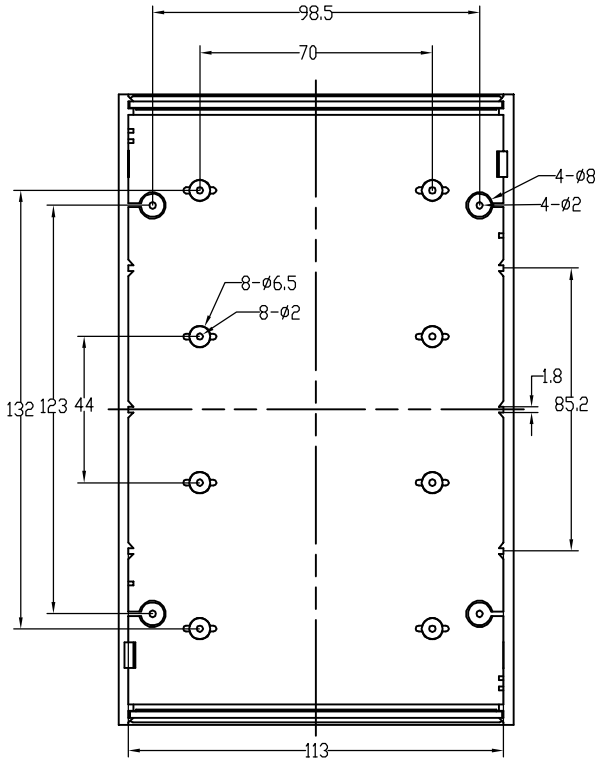

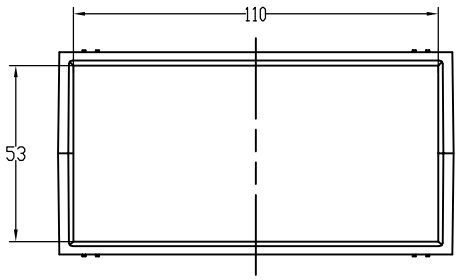

Drawing	Auditing	Confirm	Custom Name		Material	
			Product Name		Drawing Scale	A3
			Product Code	15-1	Project View	(mm)