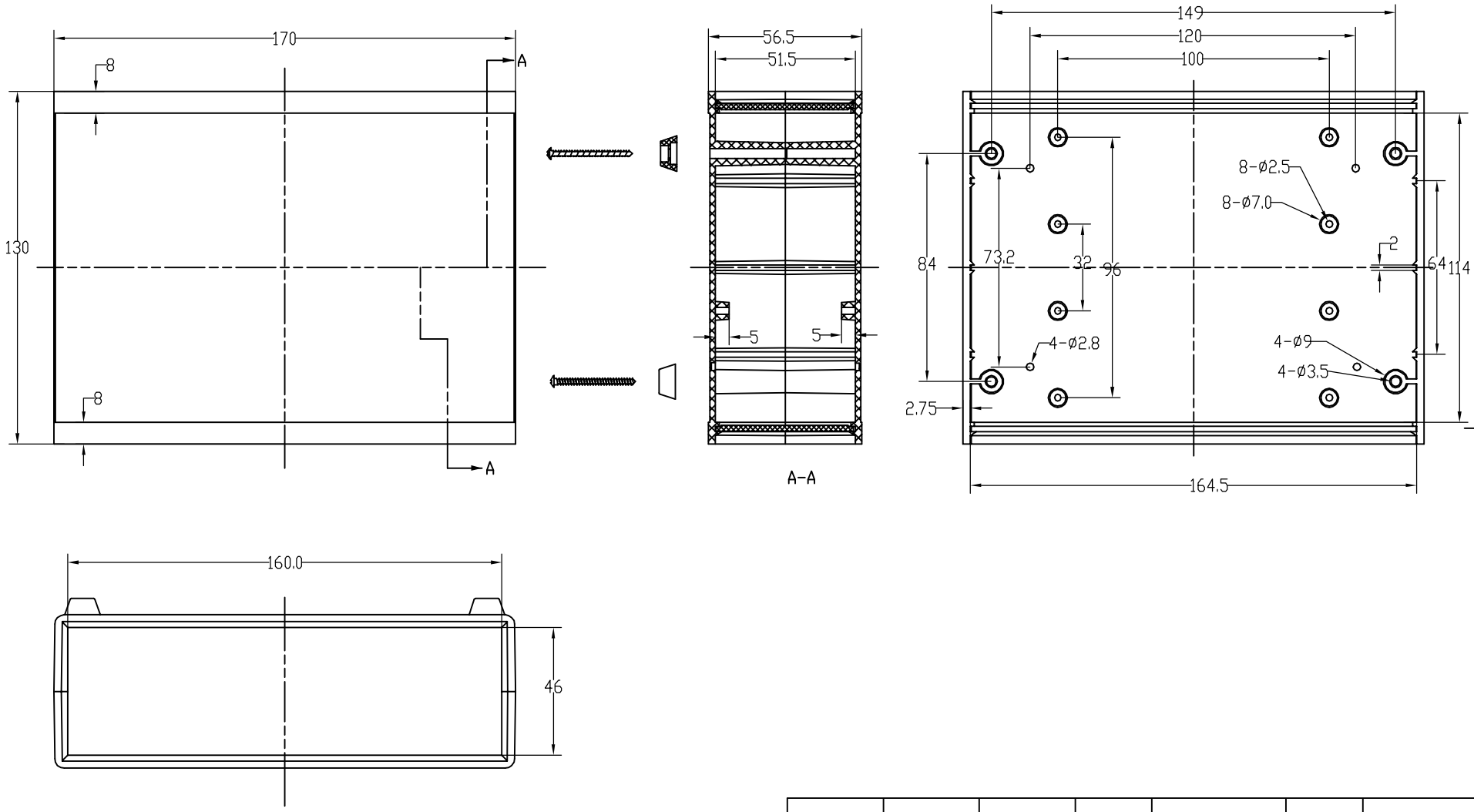

Drawing	Auditing	Confirm	Custom Name		Material	
			Product Name		Drawing Scale	A2
			Product Code	15-6	Project View	(mm)
			SANHE			